Chip Bucket (Standard)

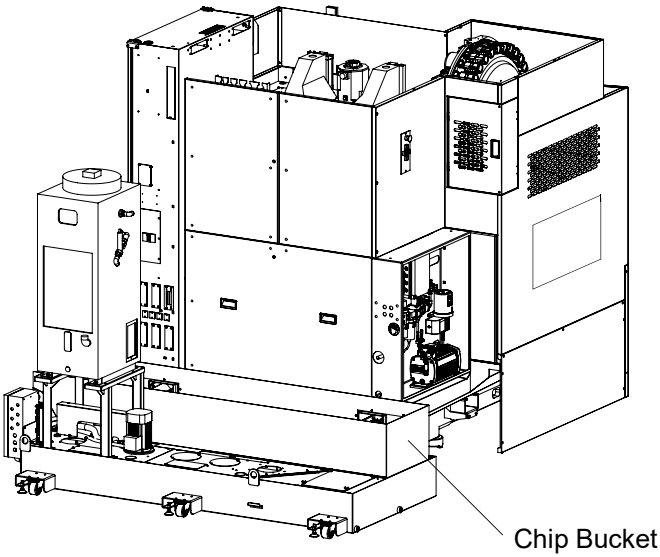
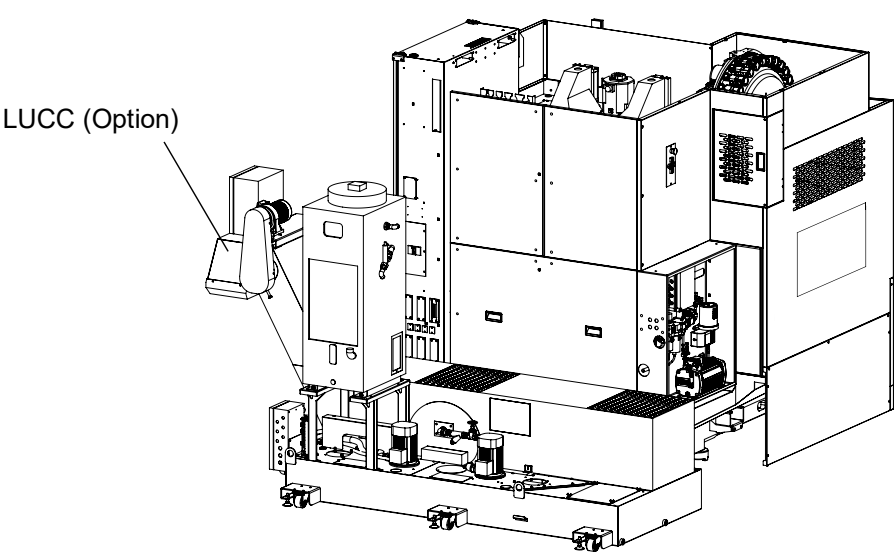
Lift-Up Chip Conveyor (LUCC - Option)